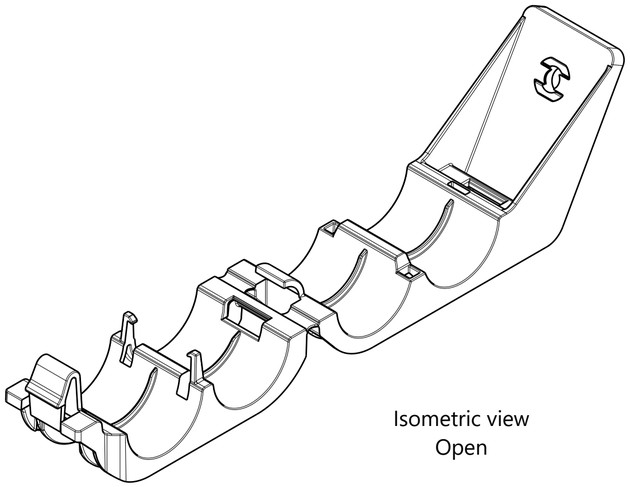

Isometric view
Open

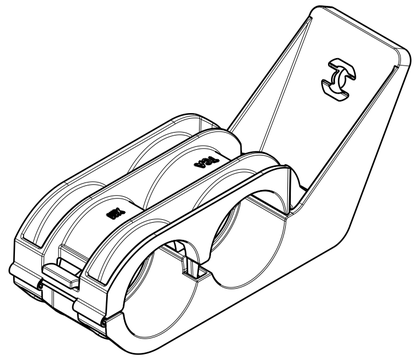

Isometric view
Closed

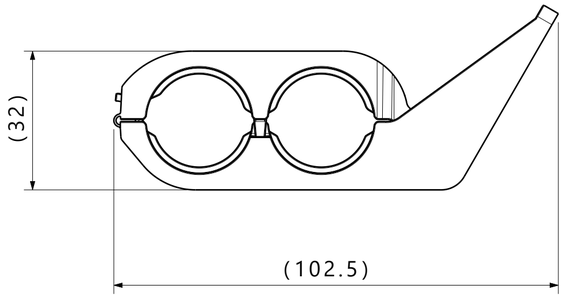

Front view
Closed

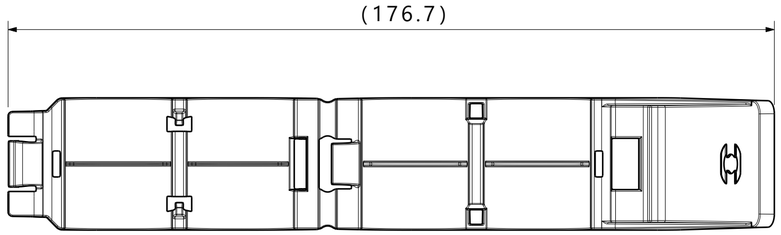

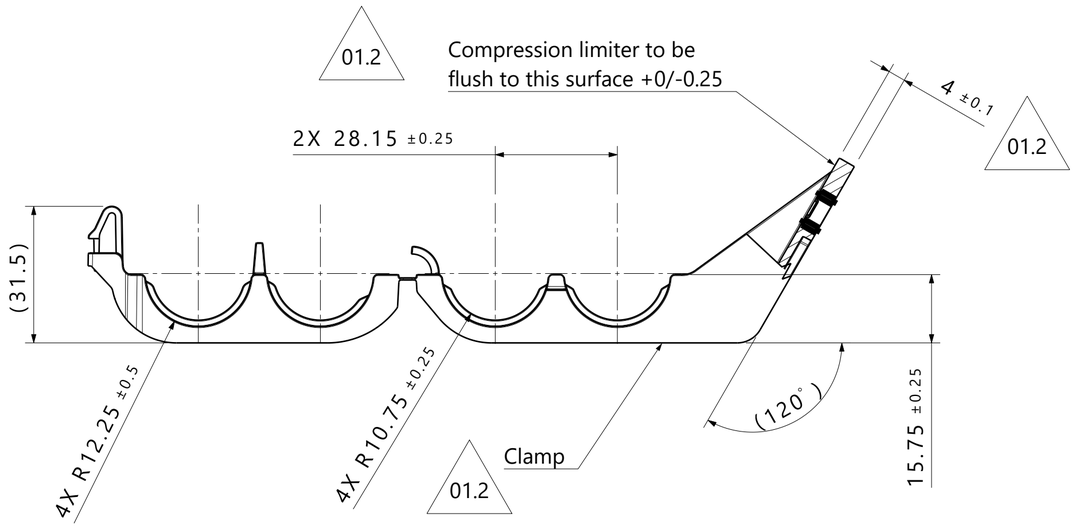

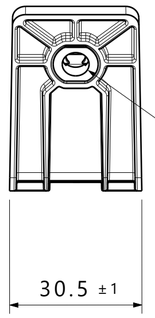

Notes:
1. Material: See chart
2. Material color: See chart
3. Maximum percent regrind permissible: 25%
4. Max allowable flash to be: 0.5mm
5. Max allowable mismatch to be: 0.1mm
6. Applicable stud size:
   A. M6 x 1
   B. T6

01.2

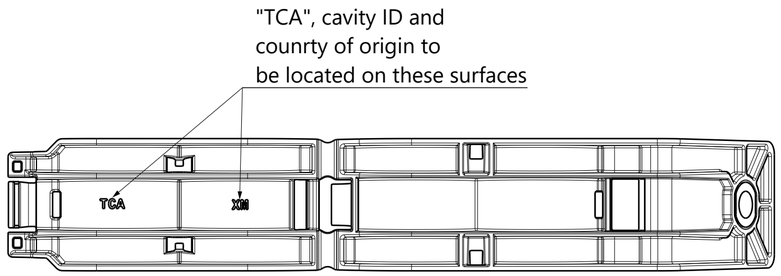

Global Part Description	Clamp		Compression Limiter	
	Material	Color	Drawing	Material
DHVC24M6A-PA66HIRHSUV-BK	PA66HIRHSUV	Black	21-0349-002-CSU	FC-0208-50

Revision Level			Revision Record
Drawing	State	Part	ECN 017164
01.2	Design Release	-	
Changed	Date (YYYY/MM/DD)		
Cottrill	2022/09/14		
Approved	Date (YYYY/MM/DD)		
Fish	2022/09/14		

All drawing revisions are stored in CAD PDM database

The copyright of this drawing is reserved by HellermannTyton.

Drawn	Cottrill
Date (YYYY/MM/DD)	2022/02/04
Approved	Karabon
Date (YYYY/MM/DD)	2022/02/04

Units: mm

HellermannTyton
www.HellermannTyton.com

Title: HV cable/P-clamp with stud mount at 120 degrees

Drawing-No: 22-0061-001-CSU

Scale: 1:1
Global Project Number: 22-0061
Format: A2
Sheet: 1 / 1