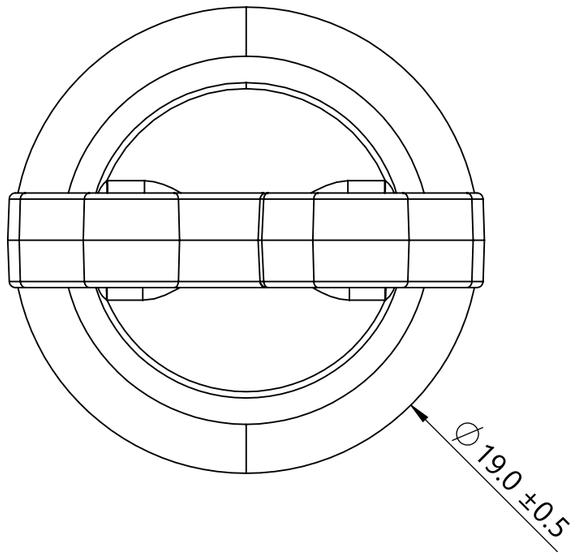

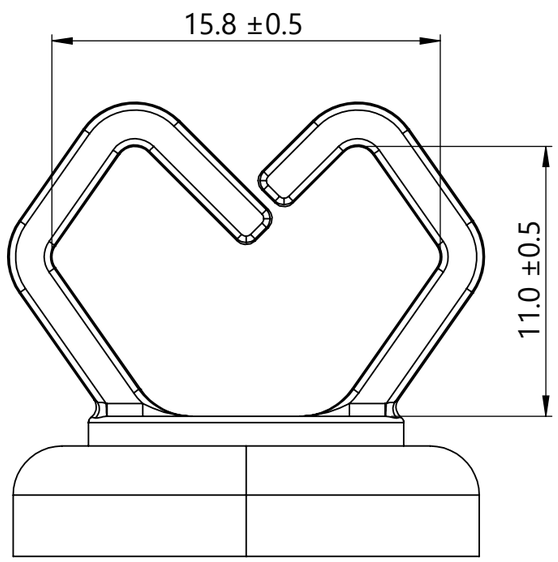

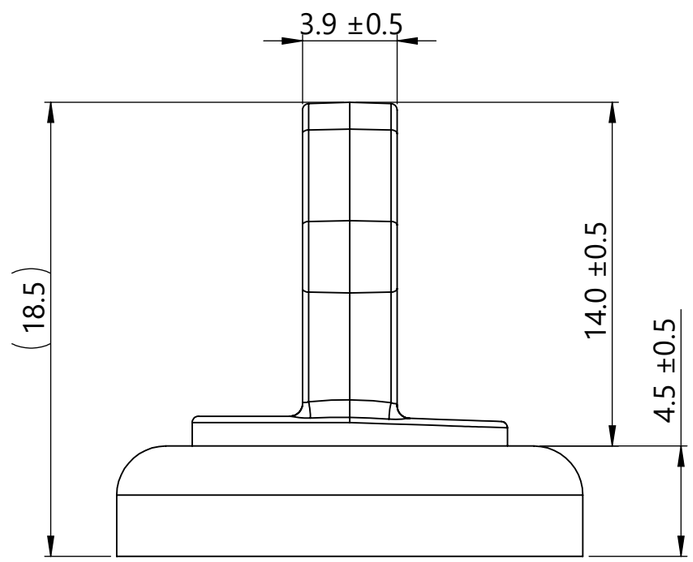

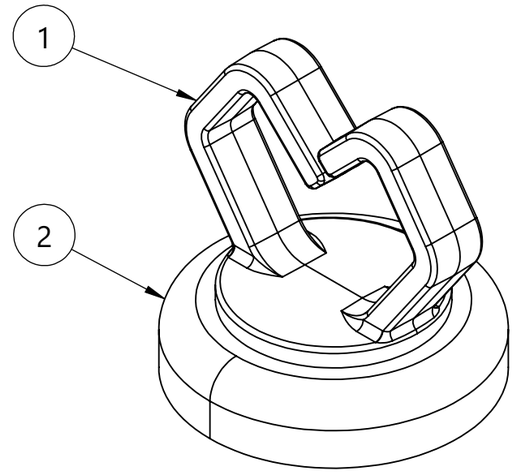

Isometric View
Scale 3 : 1

Reference:
1. Material: See chart
2. Material color: See chart
3. Min. Mechanical Tensile Strength: 44.5N (10 lbf)
4. Maximum percent regrind permissible: 10%
5. Maximum allowable flash to be: 0.25mm
6. Magnets are very strong. Handling them with care is necessary to prevent personal injuries, property damages and magnet damages
7. Listed pull force values are based on magnet strength only. Assembled product performance will vary based on application and surface type. Please test application to determine best product fit

UL Listing Magnetic Cable Holder 1/2 in.		
ANSI/UL 1565	Positioning Devices TYPE 21 E64139	Mechanical Tensile Strength: 45N (10 lbf)
CAN	CSA-C22.2 No. 18.5	
All testing performed using 3mm min. thick 1008-1010 steel plate		

Global Part Description	Item No.	Qty.	Material	Finish	Color
MAGC10S-NDFEB35/POM/ST-WH	1	1	POM	-	White
	2	1	NdFeB N35M	NiCuNi	Silver
			Steel	Epoxy	White

Revision level			Revision Record
Drawing	State	Part	ECN 311050 - Initial Release
00.0	Design Release	-	
Changed	Date (YYYY/MM/DD)		
Johnson	2024/04/29		
Approved	Date (YYYY/MM/DD)		
Uhler	2024/05/20		

All drawing revision are stored in CAD PDM database

The copyright of this drawing is reserved by HellermannTyton.

Drawn	Date (YYYY/MM/DD)
Johnson	2024/04/29
Approved	Date (YYYY/MM/DD)
Uhler	2024/05/20

Units: mm

HellermannTyton
www.HellermannTyton.com

Title: Magnetic Cable Holder, 1/2 in. clip, Small, UL Listed 10 lb

Drawing-No: 23-0066-002-CSU

Scale: 4:1
Global Project Number: 23-0066
Format: A3
Sheet: 1/1