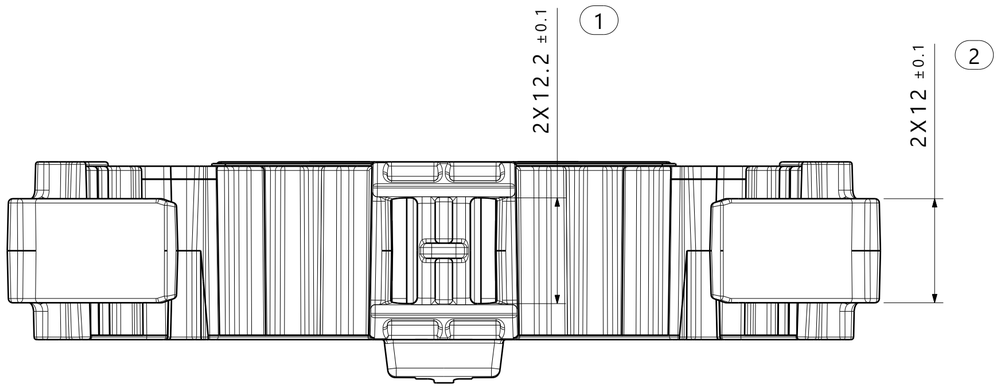

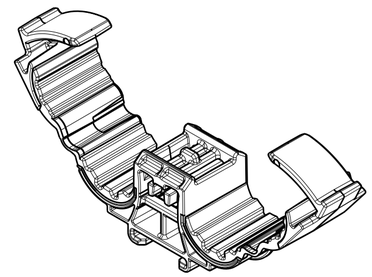

Isometric view
Open
Scale 1:1

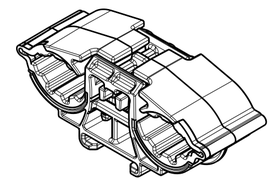

Isometric view
Closed minimum bundle diameter
Scale 1:1

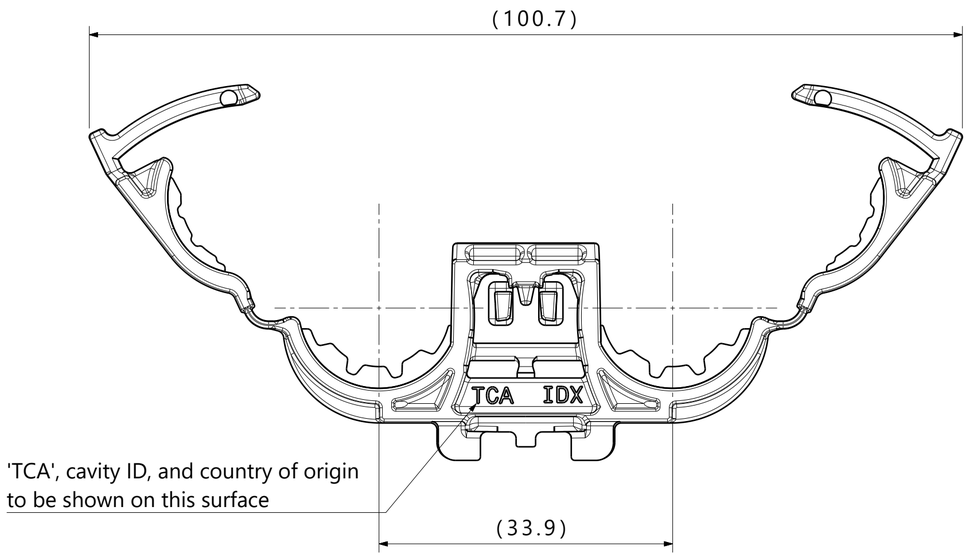

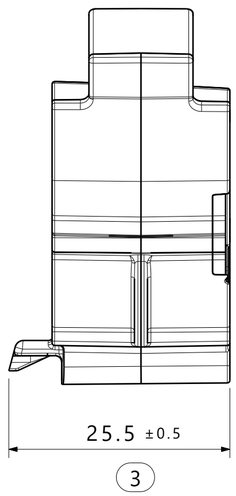

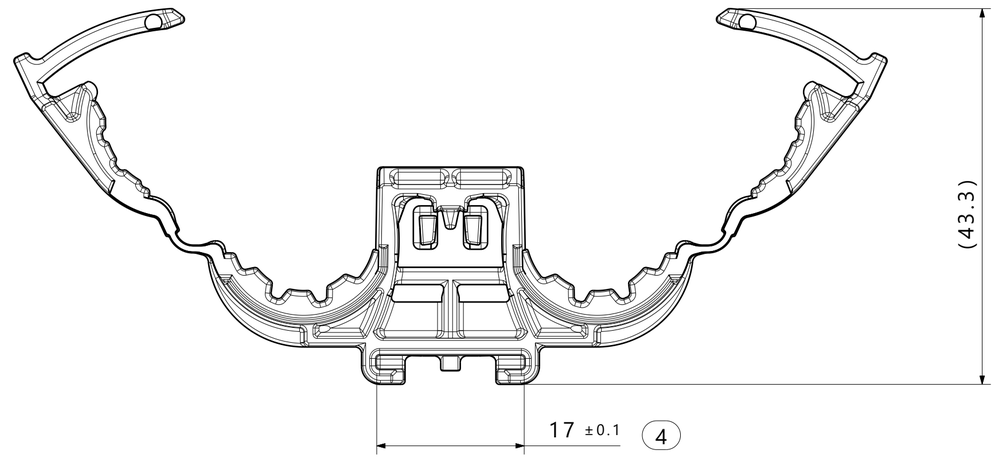

Notes:
1. Material: See chart
2. Material color: See chart
3. Maximum percent regrind permissible: 25% for PA66 only
4. Max allowable flash to be: 0.5mm
5. Max allowable mismatch to be: 0.1mm
6. A dimension without an inspection report symbol ( ) does not require inspection. It may be controlled on the individual component drawing.
   a. Total number of inspections required: 4
   b. Last number used: 4
   c. Missing symbols: -

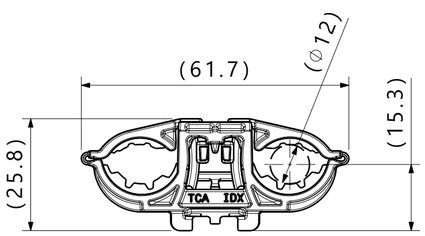

Reference view
Closed minimum bundle diameter
Scale 1:1

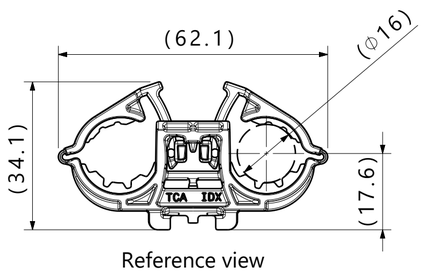

Reference view
Closed maximum bundle diameter
Scale 1:1

Global Part Description	Material	Color
SGDROC12-16SLOT17-PA66HIRHSUV/TPE-BK	PA66HIRHSUV	Black
	TPE	

Revision Level			Revision Record
Drawing	State	Part	ECN 311921
00.3	Design Release	-	
Changed		Date (YYYY/MM/DD)	
Karabon		2025/02/28	
Approved		Date (YYYY/MM/DD)	
Van Hulst		2025/02/28	

All drawing revisions are stored in CAD PDM database

The copyright of this drawing is reserved by HellermannTyton.

Units: mm

HellermannTyton
www.HellermannTyton.com

Drawn	Karabon	2025/02/28
Approved	Van Hulst	2025/02/28

Date (YYYY/MM/DD)

Title: Overmolded Dual Ratchet O-Clamp size A with 17mm connector clip slot

Drawing-No: 23-0124-001-CSU

Scale: 2:1
Global Project Number: 23-0124
Format: A2
Sheet: 1 / 1