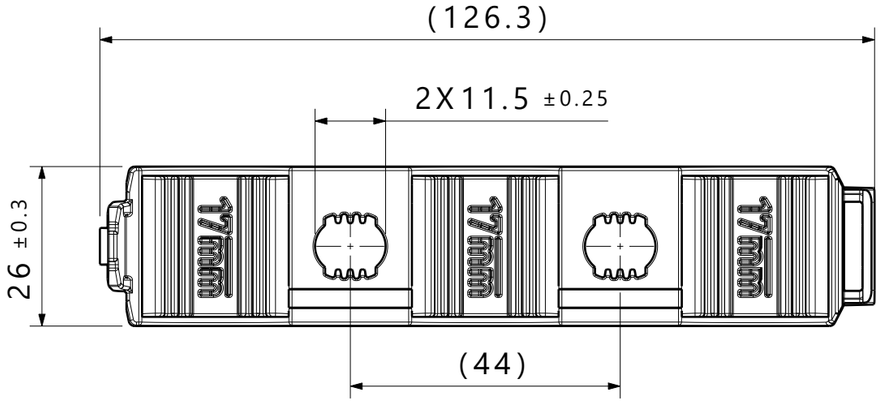

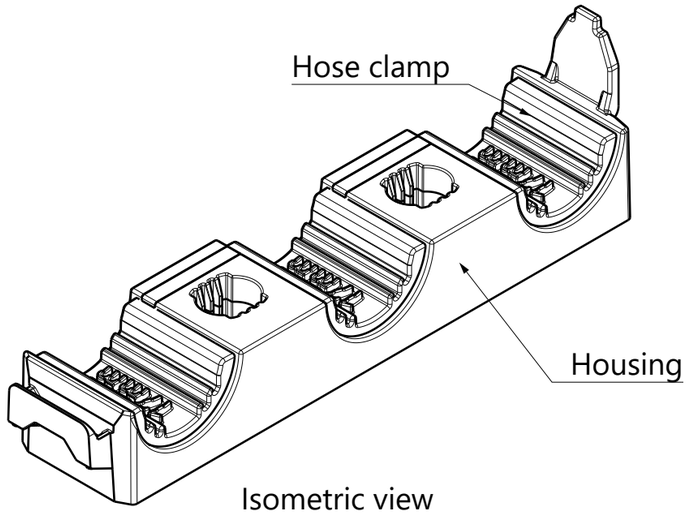

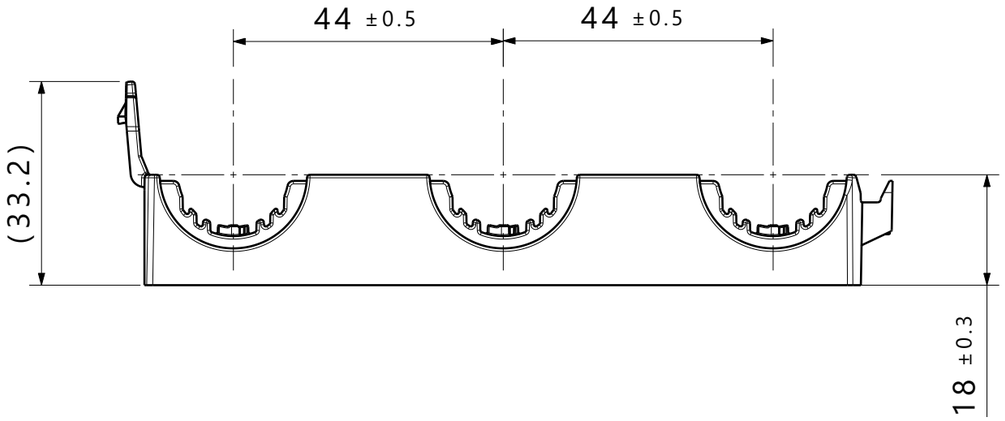

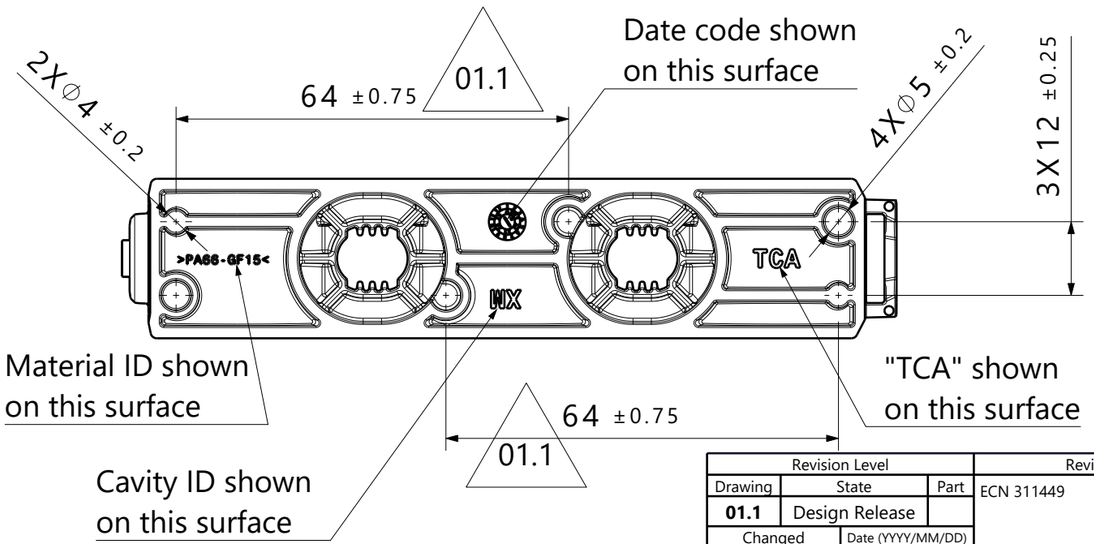

Notes:
1. Material: See chart
2. Material color: See chart
3. Maximum percent regrind permissible: 0%
4. Max allowable flash to be: 0.50mm
5. Max allowable mismatch to be: 0.10mm
6. Applicable stud size:
   A. M8X1.25

Global Part Description	Housing		Hose clamp	
	Material	Color	Material	Color
HDC17X3BASE-PA66GF15/TPE-BK	PA66GF15	Black	TPE	Black

Revision Level			Revision Record
Drawing	State	Part	ECN 311449
01.1	Design Release		
Changed	Date (YYYY/MM/DD)		
Rohde	2024/09/10		
Approved	Date (YYYY/MM/DD)		
Van Hulst	2024/09/10		

All drawing revisions are stored in CAD PDM database

The copyright of this drawing is reserved by HellermannTyton.

Drawn	Rohde	Date (YYYY/MM/DD) 2023/12/13
Approved	Van Hulst	Date (YYYY/MM/DD) 2023/12/13

Units: mm

HellermannTyton
www.HellermannTyton.com

Title: Triple clamp - 17mm

Drawing-No: 23-0183-005-CSU

Scale: 1:1
Global Project Number: 23-0183
Format: A3
Sheet: 1 / 1