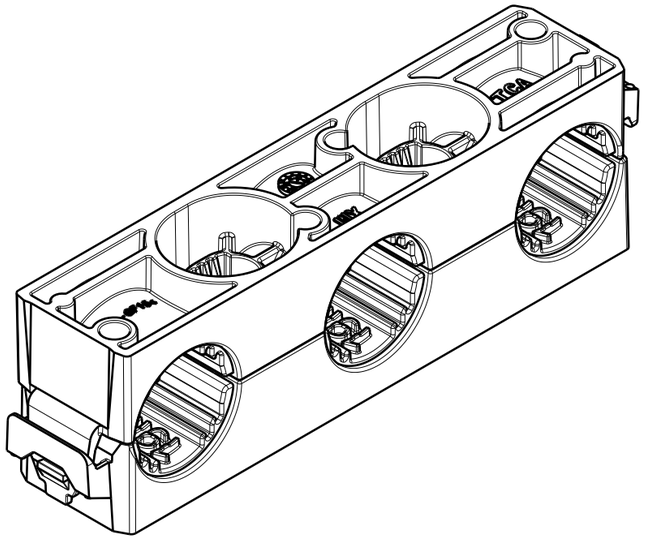

Assembled example isometric view

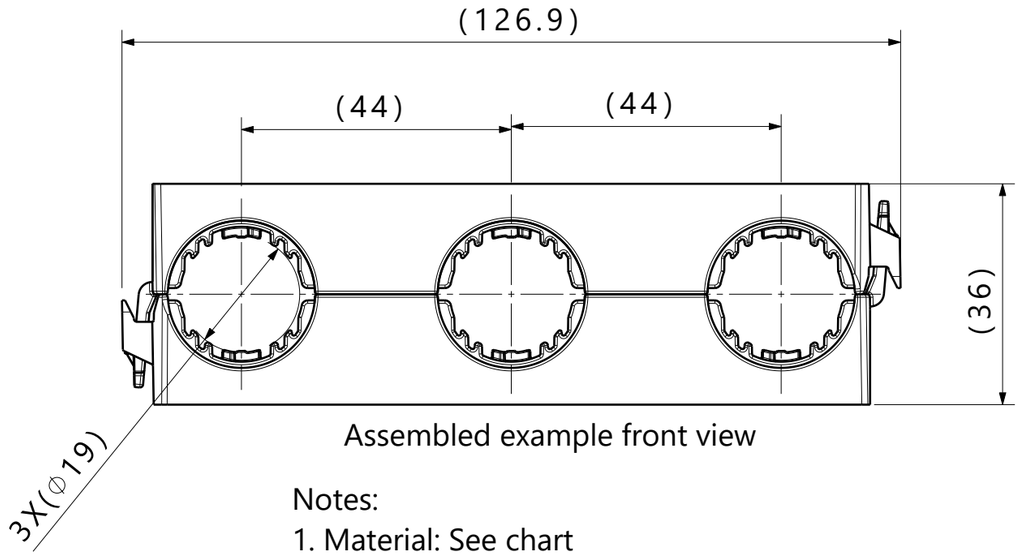

Assembled example front view

Notes:
1. Material: See chart
2. Material color: See chart
3. Maximum percent regrind permissible: 0%
4. Max allowable flash to be: 0.50mm
5. Max allowable mismatch to be: 0.1mm
6. Threaded stud length to be at least: 40mm
7. Applicable stud size:
   A. M8 x 1.25 Threaded
8. Two HDC19X3BASE clamp halves are required for a functional clamp assembly

01.1

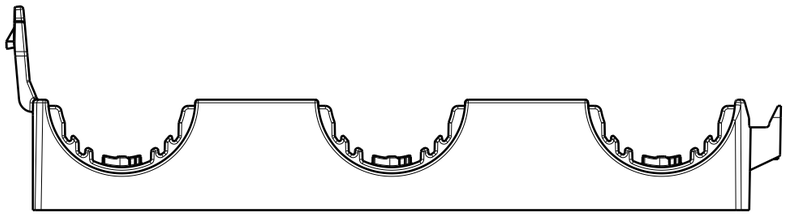

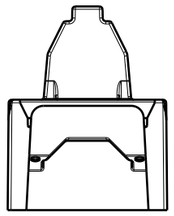

Delivery condition

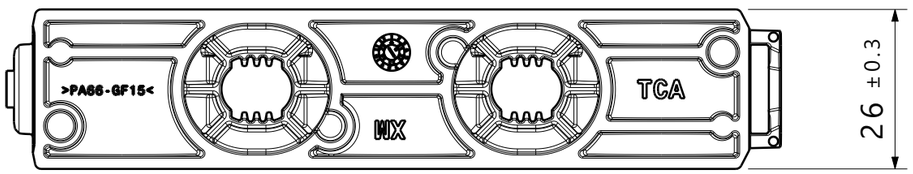

Global Part Description	Housing		
	Drawing	Material	Color
HDC19X3BASE-PA66GF15/TPE-BK	23-0184-005-CSU	PA66GF15	Black

Revision Level			Revision Record
Drawing	State	Part	ECN 311190
01.1	Design Release		
Changed	Date (YYYY/MM/DD)		
Rohde	2024/05/30		
Approved	Date (YYYY/MM/DD)		
Van Hulst	2024/05/30		

All drawing revisions are stored in CAD PDM database

The copyright of this drawing is reserved by HellermannTyton.

Drawn	Rohde	Date (YYYY/MM/DD) 2023/12/13
Approved	Van Hulst	Date (YYYY/MM/DD) 2023/12/13

Units: mm

HellermannTyton
www.HellermannTyton.com

Title: Triple clamp with 19mm hose cover

Drawing-No: 23-0184-105-CSU

Scale: 1:1
Global Project Number: 23-0184
Format: A3
Sheet: 1 / 1