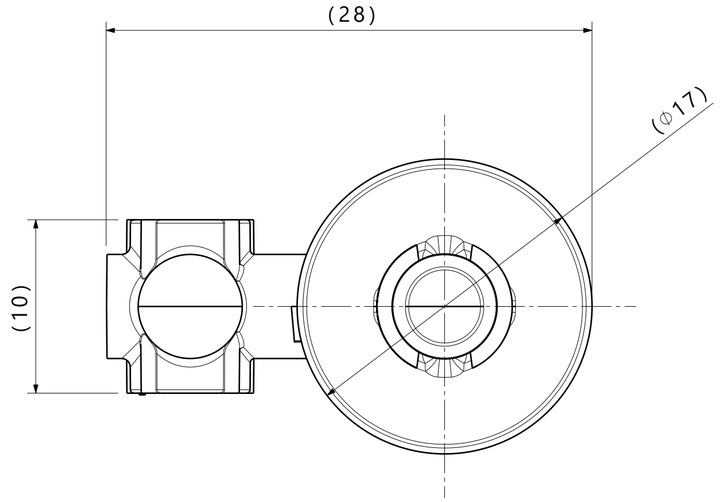

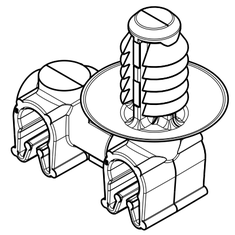

Isometric view
Scale: 2:1

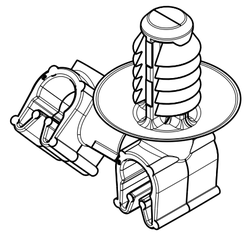

Rotated isometric view
Scale: 2:1

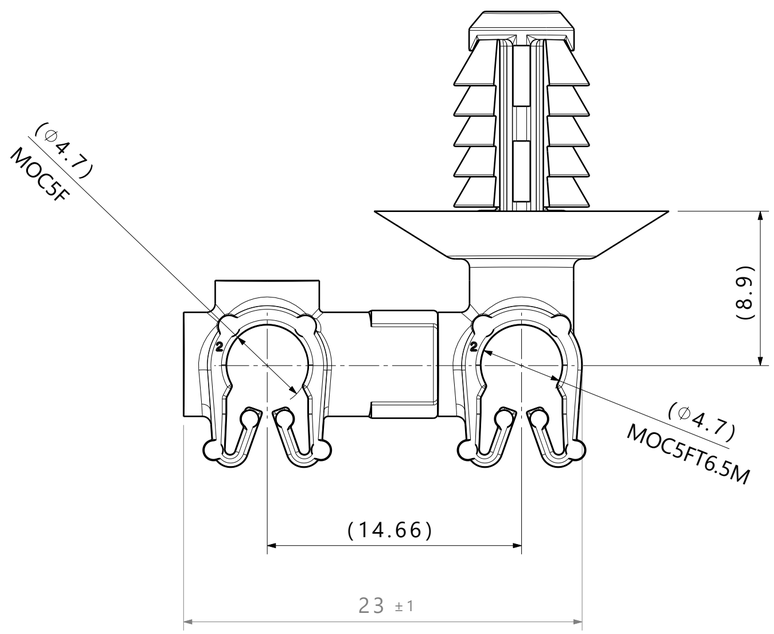

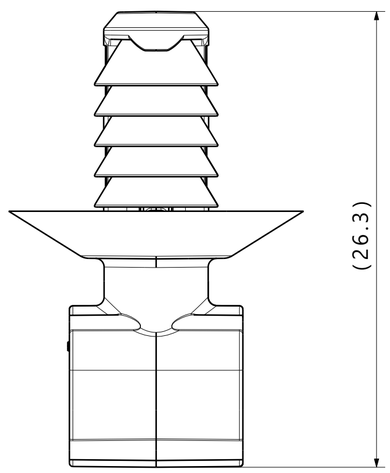

Reference:
Performance requirements at dry as molded:
1. Fir tree push in force: 45 newtons (10 lbf) max in the applicable nominal hole size and a plate thickness of 1.8mm.
2. Fir tree pull out force: 110 newtons (25 lbf) min in the applicable nominal hole size and a plate thickness of 1.8mm.

Notes:
1. Clips rotate 360 degrees. Orientation is not controlled.
2. Sheet metal thickness range: 0.60mm - 6.00mm
3. Applicable hole size:
   A. 6.5mm +0.5/- 0.4

*Recommended sizes may differ depending on the application, product requirements and materials used

**Patents: US D840,799 S, EU 003864313 , CN 304373914 S

Diameter Range*		
Harness	Hose	Hard Pipe/Tube
4.5mm-5.5mm	4.0mm-5.3mm	4.8mm-5.5mm

Global Part Description	MOC5F**			MOC5FT6.5M**		
	Drawing	Material	Color	Drawing	Material	Color
MOC5FMOC5FT6.5M-PA66HIRHSUV-BK	16-0313-000-CSU	PA66HIRHSUV	Black	16-0313-029-CSU	PA66HIRHSUV	Black

Revision Level			Revision Record
Drawing	State	Part	ECN 017556
00.0	Design Release	-	
Changed	Date (YYYY/MM/DD)		
Rubenkov	2023/05/31		
Approved	Date (YYYY/MM/DD)		
Van Hulst	2023/05/31		

All drawing revisions are stored in CAD PDM database

The copyright of this drawing is reserved by HellermannTyton.

Drawn	Date (YYYY/MM/DD)
Rubenkov	2023/05/31
Approved	Date (YYYY/MM/DD)
Van Hulst	2023/05/31

Units: mm

HellermannTyton
www.HellermannTyton.com

Title: MOC5 female coupled to MOC5 male fir tree 6.5mm

Drawing-No: 23-0185-001-CSU

Scale: 4:1
Global Project Number: 23-0185
Format: A2
Sheet: 1 / 1