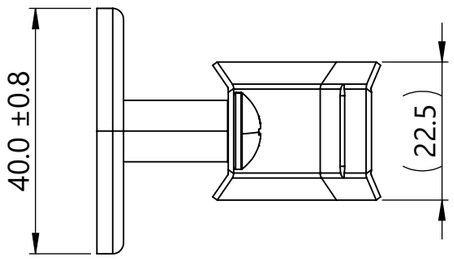

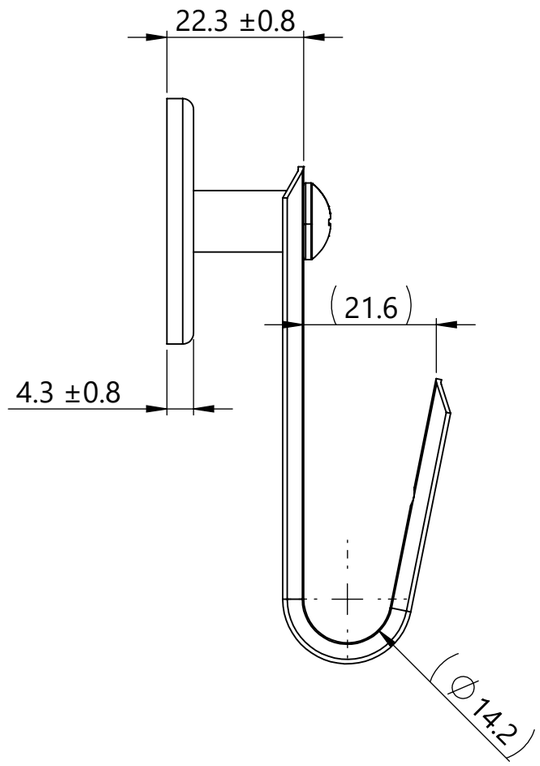

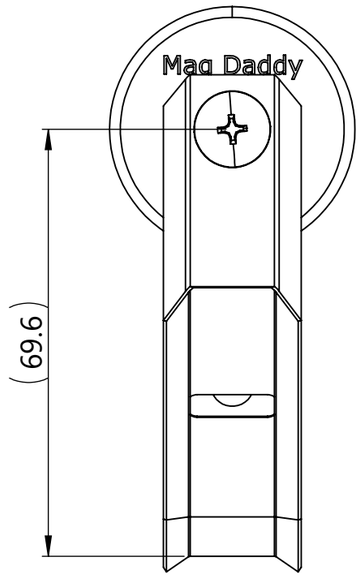

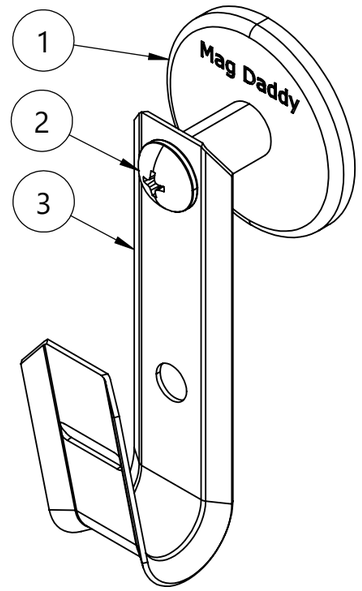

Isometric View

J-Hook Cable Capacity	
Cable Type	Qty.
CAT. 5e	16
CAT. 6	10
CAT.6A	2

UL Listing Magnetic J-Hook 3/4 in., Side Mounted		
ANSI/UL 1565	Positioning Devices E64139	75N (17 lbf) Vertical Pull
CAN	CSA-C22.2 No. 18.5	
All testing performed using 3mm min. thick 1008-1010 steel plate		

Reference:
1. Material: See chart
2. Material color: See chart
3. Min. Vertical Pull Force: 75N (17 lbf)
4. Magnets are very strong. Handling them with care is necessary to prevent personal injuries, property damages and magnet damages
5. Listed pull force values are based on magnet strength only. Assembled product performance will vary based on application and surface type. Please test application to determine best product fit

Global Part Description	Item No.	Qty.	Material	Finish	Color
MAGJH90SXS-NDFEB45/ST-ML	1	1	Steel	Nickel	Silver
		1	NdFeB N45M	NiCuNi	
	2	1	Steel	Zinc	Silver
	3	1	Steel	Zinc	Yellow

Revision level			Revision Record
Drawing	State	Part	ECN 311050 - Initial Release
00.0	Design Release	-	
Changed	Date (YYYY/MM/DD)		
Johnson	2024/05/01		
Approved	Date (YYYY/MM/DD)		
Uhler	2024/05/20		

All drawing revision are stored in CAD PDM database

The copyright of this drawing is reserved by HellermannTyton.

Drawn	Date (YYYY/MM/DD)
Johnson	2024/05/01
Approved	Date (YYYY/MM/DD)
Uhler	2024/05/20

Units: mm

HellermannTyton
www.HellermannTyton.com

Title: 3/4 in. Magnetic J-Hook, Side Mounted UL Listed 17 lb

Drawing-No: 24-0532-001-CSU

Scale: 1:1
Global Project Number: 24-0532
Format: A3
Sheet: 1/1