F1 Max.	23°C	60N
F2 Min.	23°C	100N
	80°C	50N

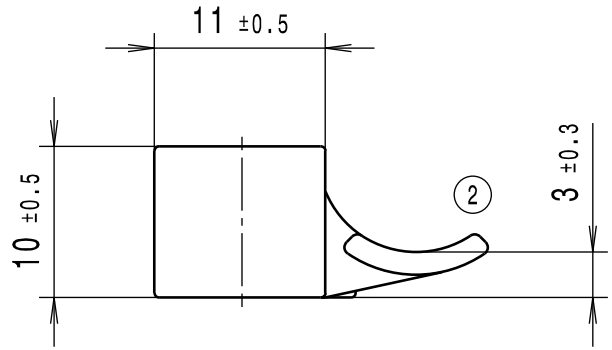

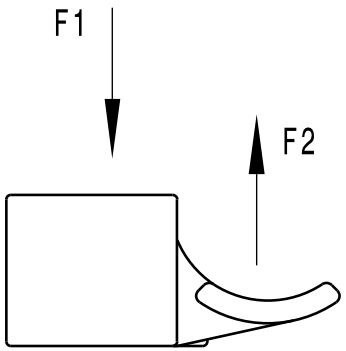

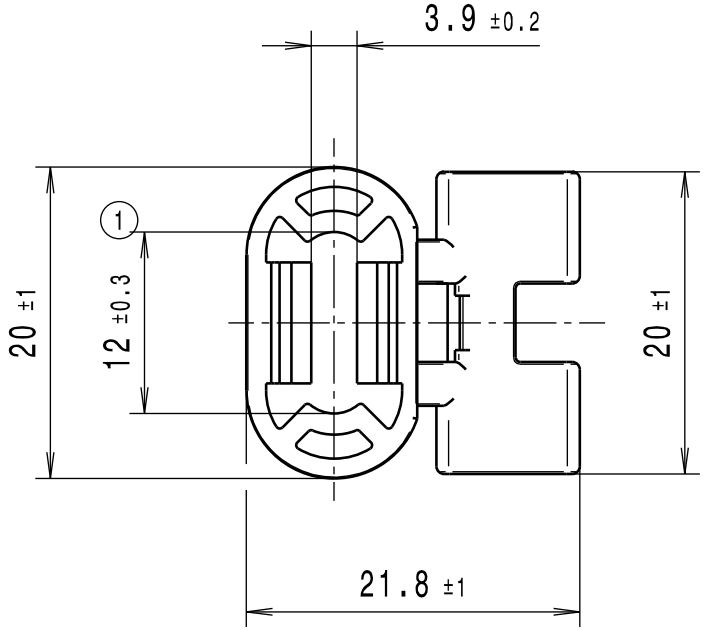

1:1

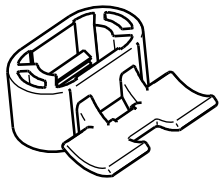

Product Type	Suit for screw	Material
SB5	ϕ5 (3)	PA66-V0 (4)
		POM

Revision Level			Revision Record
Drawing	State	Part	Add material PA66-V0
04.1	Design Release		
Changed	Date (YYYY/MM/DD)		
Lance.Lv	2021/02/20		
Approved	Date (YYYY/MM/DD)		
Kevin.Tang	2021/02/20		

All drawing revisions are stored in CAD PDM database

The copyright of this drawing is reserved by HellermannTyton.

Drawn	Date (YYYY/MM/DD)
Tom.Yang	2013/07/11
Approved	Date (YYYY/MM/DD)
Kaz	2013/07/21

Units: mm

HellermannTyton
www.HellermannTyton.com

Title: SB5

Drawing-No: 94-0101-000-CSC (3)

Scale: 1:1

Global Project Number: 94-0101

Format: A4

Sheet: 1 / 1