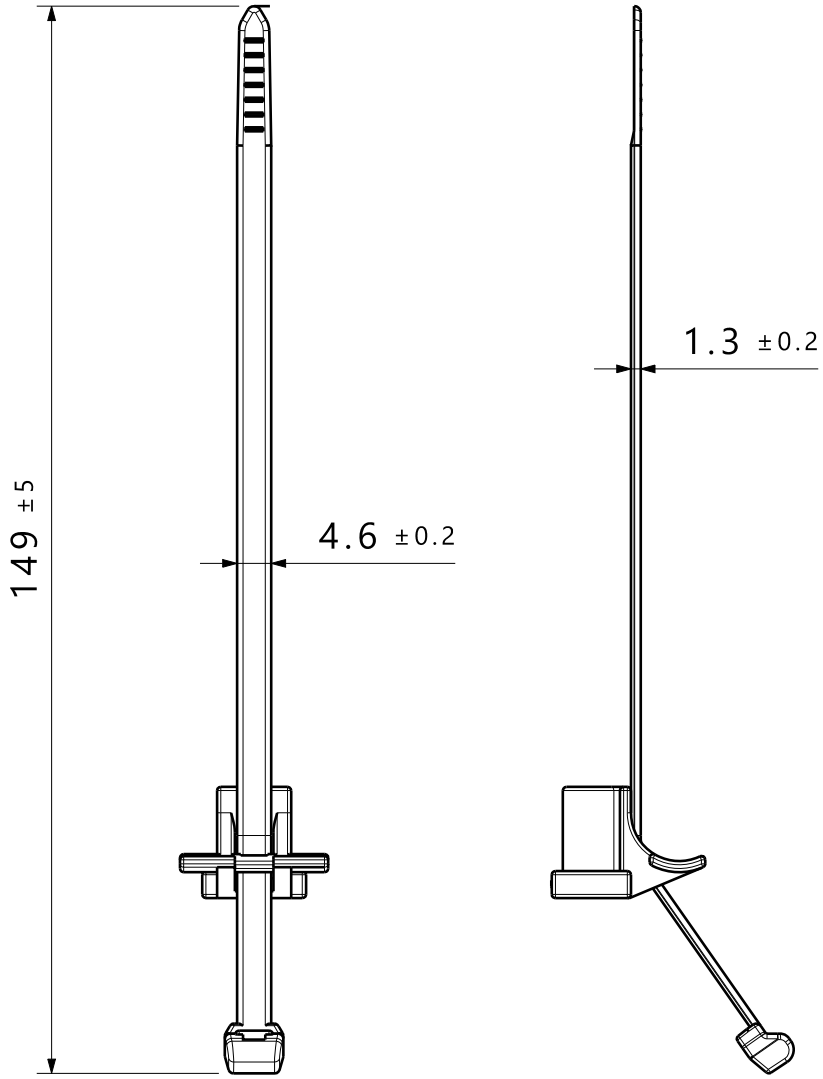

View Whihout Cable Tie

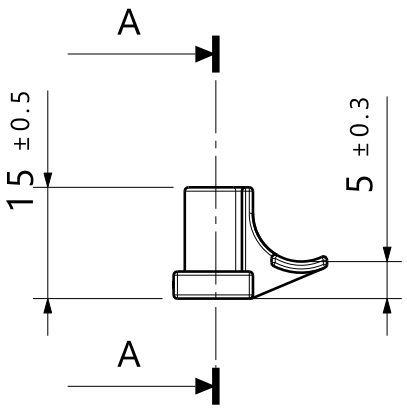

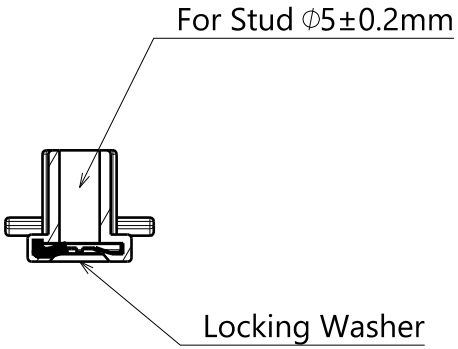

Section View A-A
Scale 1:1

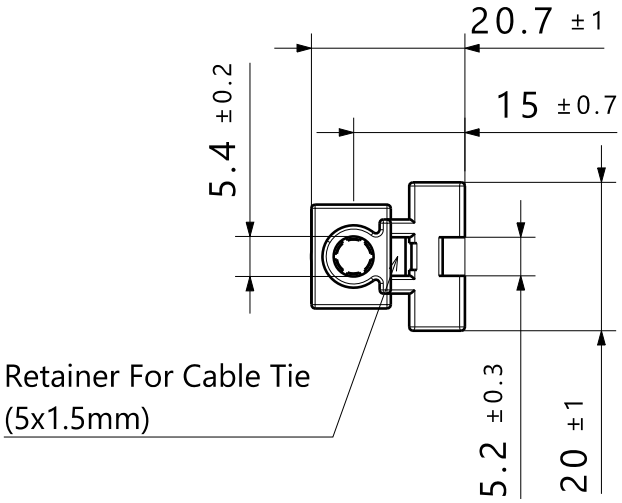

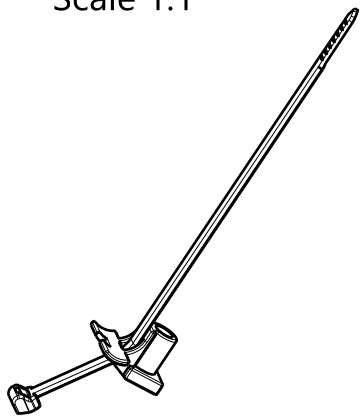

Scale 1:2

Product Type	Material a	Material b	Tensile Force	Bundle
T50SOSKL	PA66HS-BK	PA66HS-BK	MIN.225N	1.6-35mm

Revision Level			Revision Record
Drawing	State	Part	
00.0	Design Release		
Changed	Date (YYYY/MM/DD)		
Approved	Date (YYYY/MM/DD)		

All drawing revisions are stored in CAD PDM database

The copyright of this drawing is reserved by HellermannTyton.

Drawn	Date (YYYY/MM/DD)
Yancey.Yu	2020/10/09
Approved	Date (YYYY/MM/DD)
Kevin.Tang	2020/10/09

Units: mm

HellermannTyton
www.HellermannTyton.com

Title: T50SOSKL

Drawing-No: 95-0230-004-CSC

Scale: 1:1

Global Project Number: 95-0230

Format: A4

Sheet: 1 / 1