Revision No. 变更数	Revisions 变更事项	Changed 修改者	Date 日期	Approved 确认者	Date 日期
①	Add dimensional tolerance	Josh.Liu	2017-02-03	常传斌	2017-02-03
②	Update Material Information	Josh.Liu	2017-02-15	常传斌	2017-02-16
③	Update information	Josh.Liu	2019-03-15	Kevin.T	2019-03-15

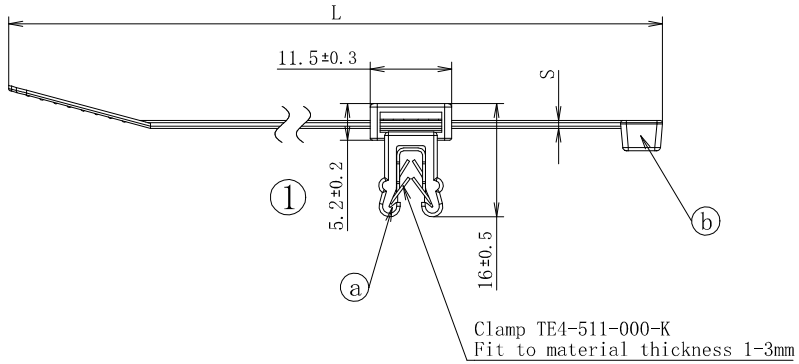

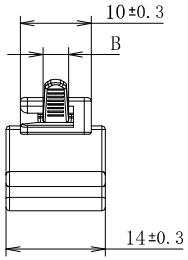

③

The direction of cable tie can be replaced by 180°

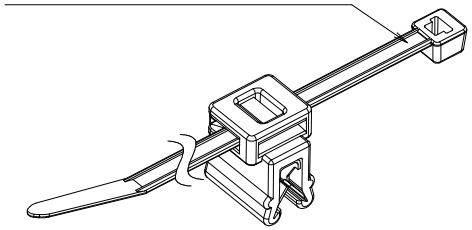

SCALE 1:1

Example of desgination
a: socket EC4
b: and cable tie T30R
being: Flxing tie T30REC4A

②

Product Type	Material For a	Material For b	Lenght L	Strap width B	Thickness S	Bundle ∅
T30REC4A	PA66 HIRHS BK	PA66 HS BK	148±7	3.6±0.5	1.1±0.2	4-33mm
T30REC4A		PA66 Natural				

CAD

Drawn/制图	Josh.Liu	2016-09-12	Scale/比例	1:1
Approved/审核	常传斌	2016-09-12	Title/品名 T30REC4A	

Demension Units/单位 MM

PERFORMANCE/性能 SPECIFICATION/标准

The copyright of this drawing is reserved by HELLERMANNTYTON. it is issued on condition that it is not reproduced, copied or disclosed to a third party, either wholly or in part, without the consent of HELLERMANNTYTON.

HellermannTyton
海尔曼太通（无锡）电器配件有限公司
(WUXI) Electrical Accessories Co.,Ltd.
Tel:+86-510-85282536
Fax:+86-510-85280112

Drawing-No./图号 99-0760-001-CSC ③

Format 格式 A4

Page 页数 1/1