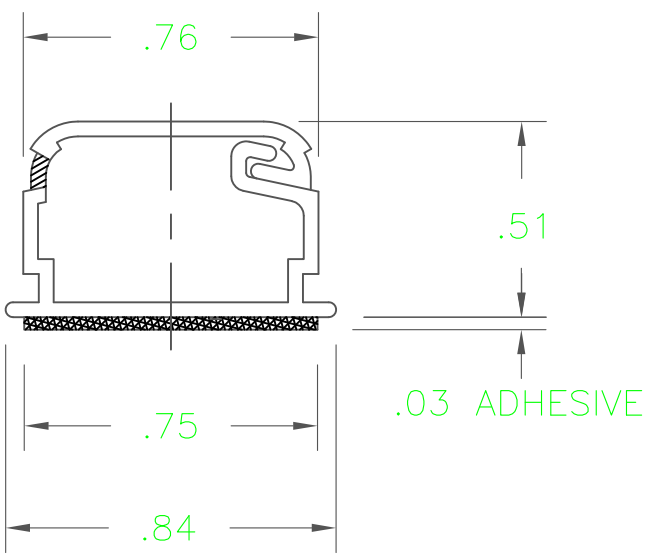

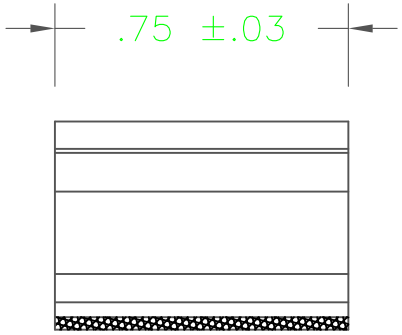

COLOR	PART NUMBER
IVORY	SRCI0500
WHITE	SRCW0500

INVENTORS

Y:\Misc\Logos\HT-B&W (Best).bmp

ALL PROPRIETARY RIGHTS IN THE SUBJECT MATTER SHOWN ON THIS DRAWING ARE EXCLUSIVE PROPERTY OF HELLERMANNTYTON

name	date	city, state

REVISION

DRAWING

level 01

date 09/21/04

by KAC

ECN # 010033

part level –

DIMENSIONS

TOLERANCES

.XXXX=

.XXX=

.XX= ±.02

.X=

∠=

unless otherwise specified

units inches

PART

number SEE CHART

phase PRODUCTION

name SRC0500 CLIP TYTON SURFACE RACEWAY

material PVC

DRAWING

FORMAT AH version M

CAD ACAD

scale 2X

computer file number CL\CST\3000020_01

previous number

drawn K.A.C. 11/08/96

checked K.A.C. 09/21/04

approved

type CUSTOMER

sheet 1 of 1

number CL3000020CST