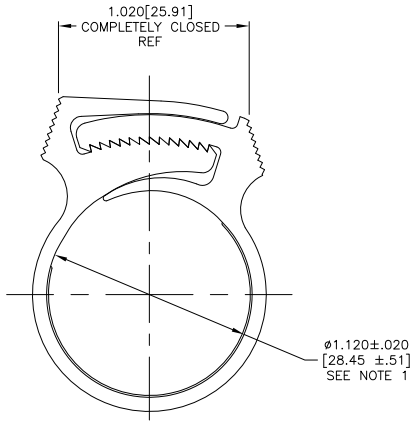

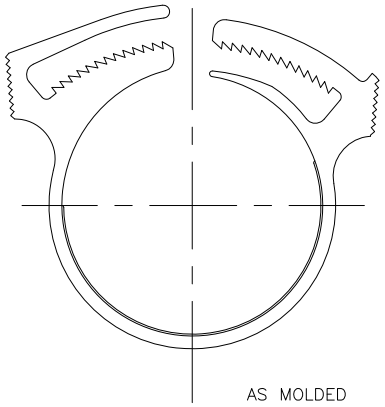

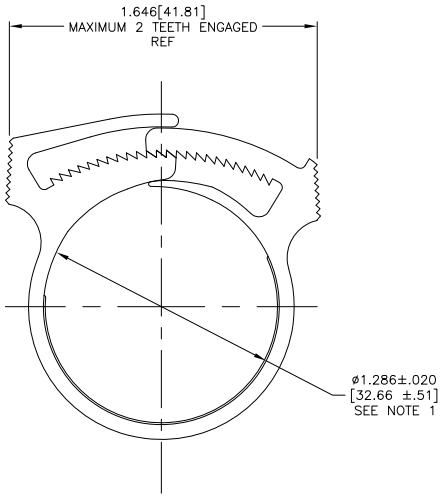

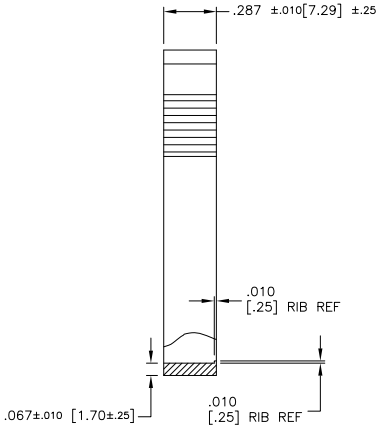

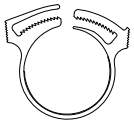

REDUCED
NO SCALE

INVENTORS

HellermannTyton

ALL PROPRIETARY RIGHTS IN THE SUBJECT MATTER SHOWN ON THIS DRAWING ARE EXCLUSIVE PROPERTY OF HELLERMANNTYTON

name	date	city, state

NOTES

NOTE:

1. INSIDE DIAMETERS ARE MEASURED IN THREE PLACES SPACED 120° APART EXCLUDING RIB.
2. 26 TOTAL TEETH, 13 TEETH POSITIONS.

REVISION

DRAWING

level	03
date	06/12/19
by	CTF
ECN #	015209
part level	—

DIMENSIONS

TOLERANCES

.XXXX=	
.XXX=	NOTED
.XX=	
.X=	
∠=	

unless otherwise specified

units inches/[mm]

PART

number	SNP28GHS	phase	PRODUCTION
name	SNP28 HOSE CLAMP		
material	03 PA66GF13 or PA66HIRHSG15 COLOR: BLACK		

DRAWING

FORMAT C version M	CAD ACAD	scale	2X
computer file number CP\CP2028\CP2028001CST_03	previous number CP\CP2028\2028001_02		
drawn K.A.C. 05/03/91	checked K.A.C. 05/03/91	approved MHT 06/12/19	
type CUSTOMER	sheet 1 of 1		
number CP2028001CST			