Revision level		Revision Record	Changed	Date	Approved	Date
part	drawing					
—	02	See ECN 010000	A.A.C.	10/14/04	KEN C.	10/14/04

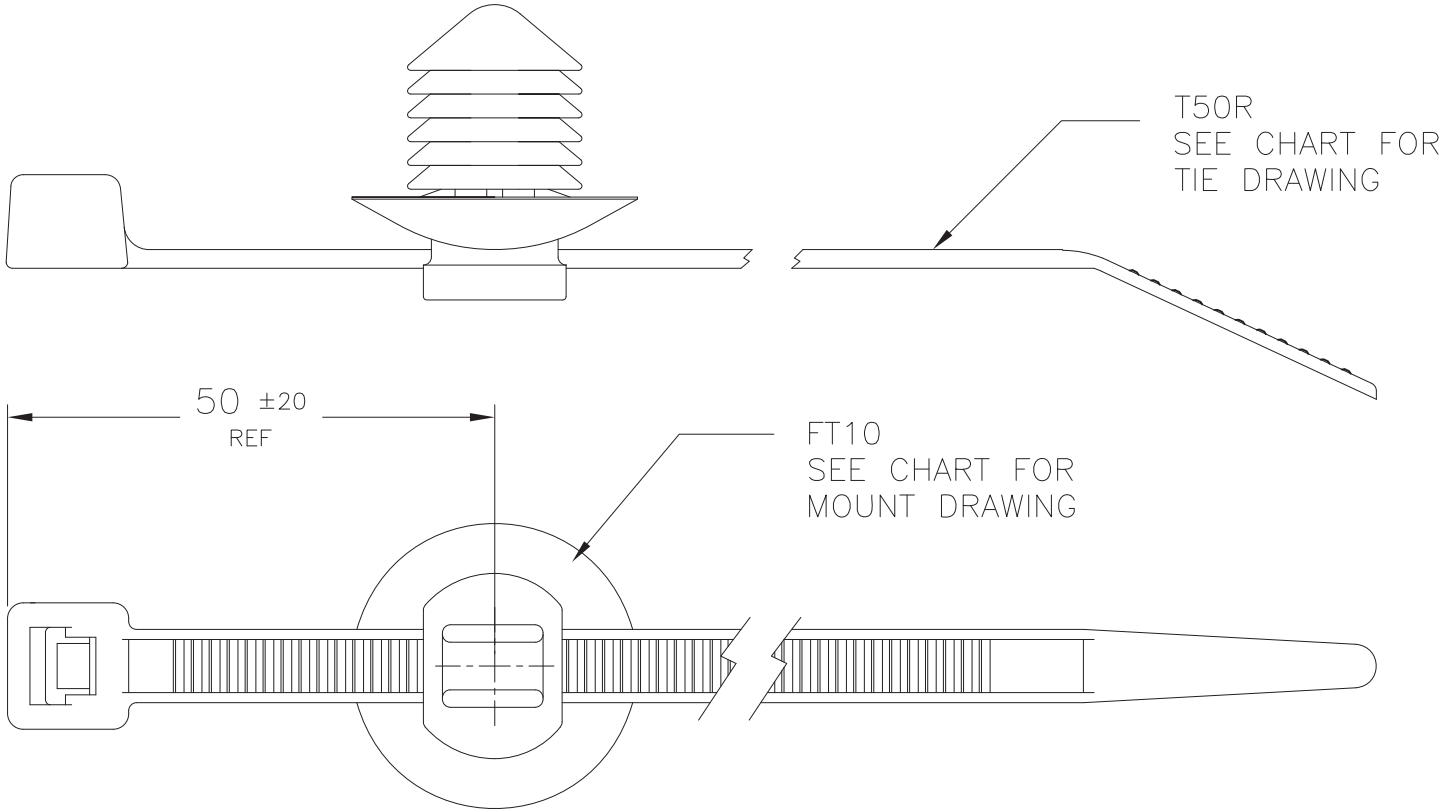

PRODUCT CODE DESCRIPTION

T50RFT10_HS

TIE COLOR
(CONSULT FACTORY FOR AVAILABLE COLORS)

02

PRODUCT CODE	TIE MATERIAL	BUNDLE RANGE	TIE DRAWING	MOUNT DRAWING
T50RFT10_HS	PA66HS	5 to 50	CT2050007CST	XMT–INSL006CST

Dimension tolerances unless otherwise specified
.XXXX = ± .0130
.XXX = ± .130
.XX = ± .30
.X = ± .8
∠ = ± 0.5 °

Dimension Units mm

PERFORMANCE SPECIFICATION

ACAD 2004

ALL PROPRIETARY RIGHTS IN THE SUBJECT MATTER SHOWN ON THIS DRAWING ARE EXCLUSIVE PROPERTY OF HELLERMANNTYTON

Drawn	K.A.C.	01/13/04
Approved	KEN C.	10/14/04

HellermannTyton®
7930 N. Faulkner Rd.
Milwaukee, WI 53224
Ph: (414) 355–1130
Fx: (414) 362–8338

Scale 2:1

Computer File Number CT\CST\2050047_02

Title
T50RFT10 STANDARD CABLE TIE WITH FT10 MOUNT

Drawing–No
CT2050047CST

Format AH

Sheet 1 of 1