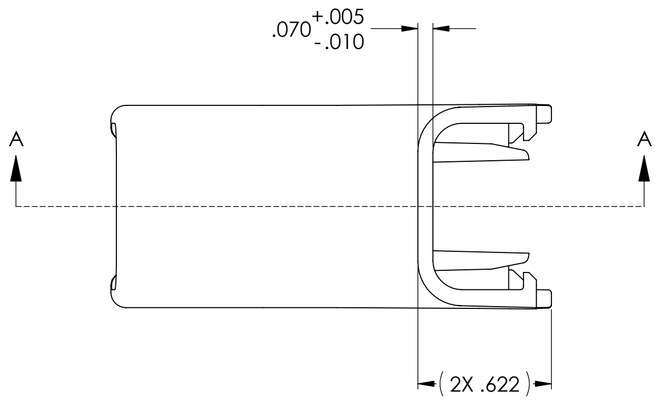

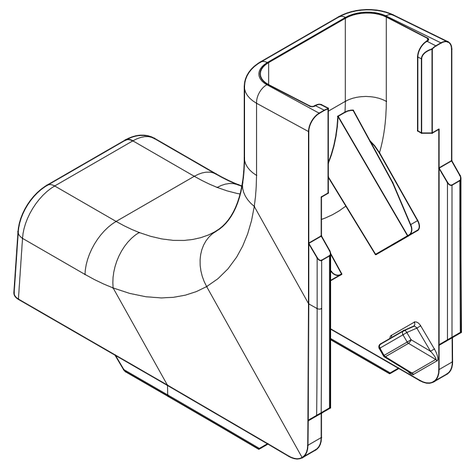

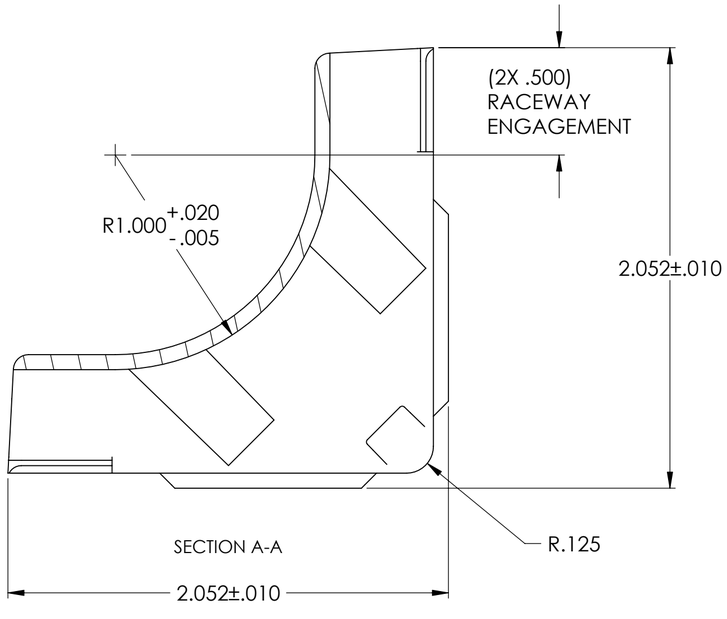

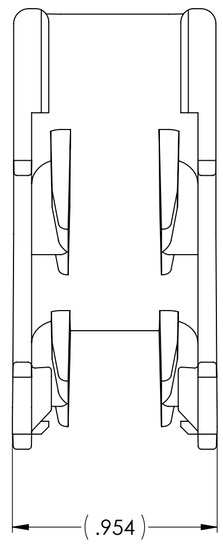

PART NO. DESCRIPTION

TSR1__-33-1

COLOR:
I = IVORY
FW = OFFICE WHITE
W = WHITE
(FOR OTHER COLORS CONTACT FACTORY)

REDUCED NO SCALE

INVENTORS

HellermannTyton

ALL PROPRIETARY RIGHTS IN THE SUBJECT MATTER SHOWN ON THIS DRAWING ARE EXCLUSIVE PROPERTY OF HELLERMANNTYTON

name	date	city, state

NOTES

1. THIS PART MATES WITH (2) TSR1 RACEWAYS.

REVISION

DRAWING level	02
by	PLN
date	01/14/03
ECN #	003574
part level	B

DIMENSIONS

TOLERANCES

.XXXX = ±.0005
.XXX = ±.005
.XX = ±.01
.X = ±.03
∠ = ±0.5°
unless otherwise specified

units inches

PART

number TSR1__-33-1 phase PRODUCTION

name TSR1-33-1
3/4" INTERNAL CORNER COVER
WITH 1" MIN BEND RADIUS

material PVC

DRAWING

format version N	C	CAD SW	scale 2:1
computer file number	DT3032007CST_02	previous number	DT3032-007_CST
drawn G. GEIGER 03/27/96	checked KAC 03/21/03	approved	
type CUSTOMER		sheet 1 of 1	
number **DT3032007CST**			