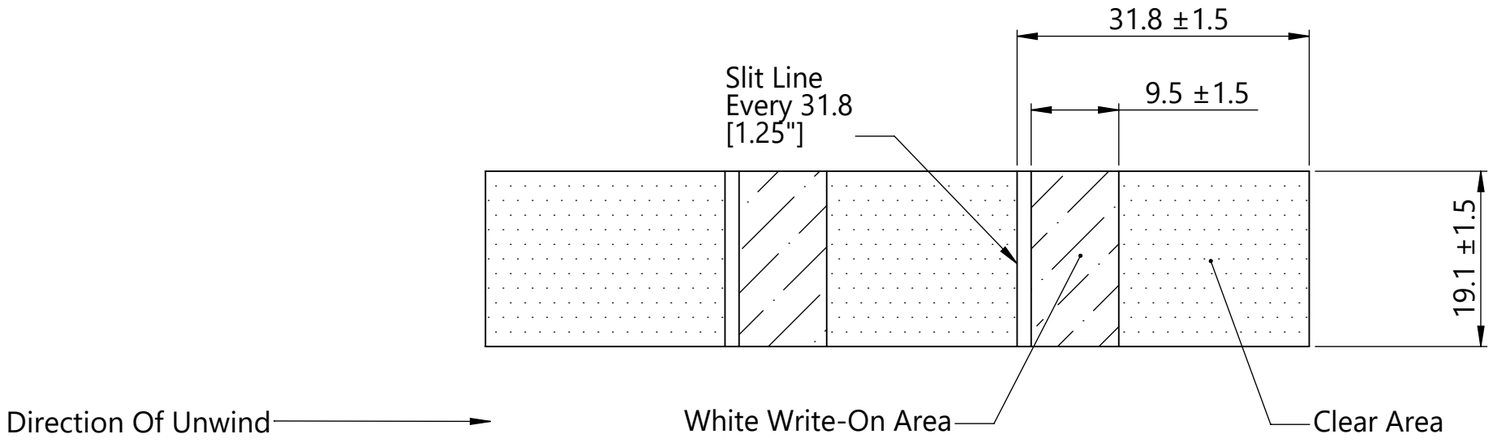

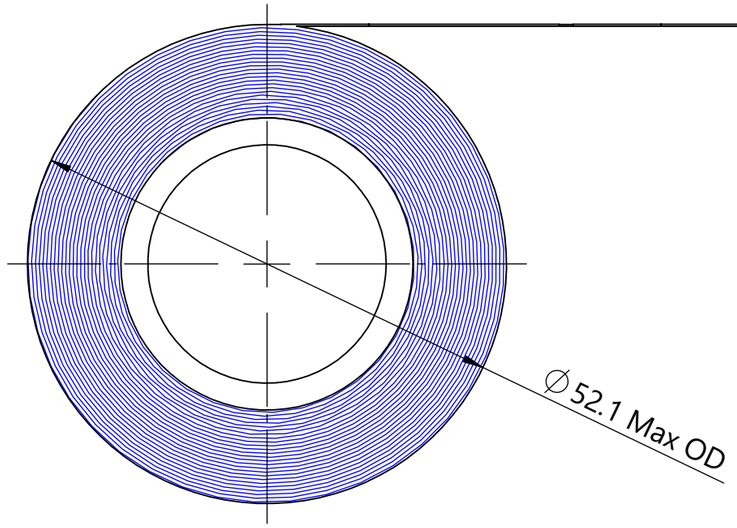

Note:
1) 200 Labels Per Roll

Global Part Description	Article No.	Material	Color
514REF-100-WH	590-05141	Type 100 Vinyl	White

Revision level			Revision Record
Drawing	State	Part	ECN 017422
01.1	Design Release	X	
Changed	Date (YYYY/MM/DD)		
-	-		
Approved	Date (YYYY/MM/DD)		
-	-		

All drawing revision are stored in CAD PDM database

The copyright of this drawing is reserved by HellermannTyton.

Drawn	Date (YYYY/MM/DD)
Grewe	2023/04/28
Approved	Date (YYYY/MM/DD)
Spangler	2023/04/28

Units: mm

HellermannTyton
www.HellermannTyton.com

Title: 514REF Rite-On Marker Refill Roll

Drawing-No: LA2001005CST

Scale: 3:2
Global Project Number: 23-0103
Format: A3
Sheet: 1/1